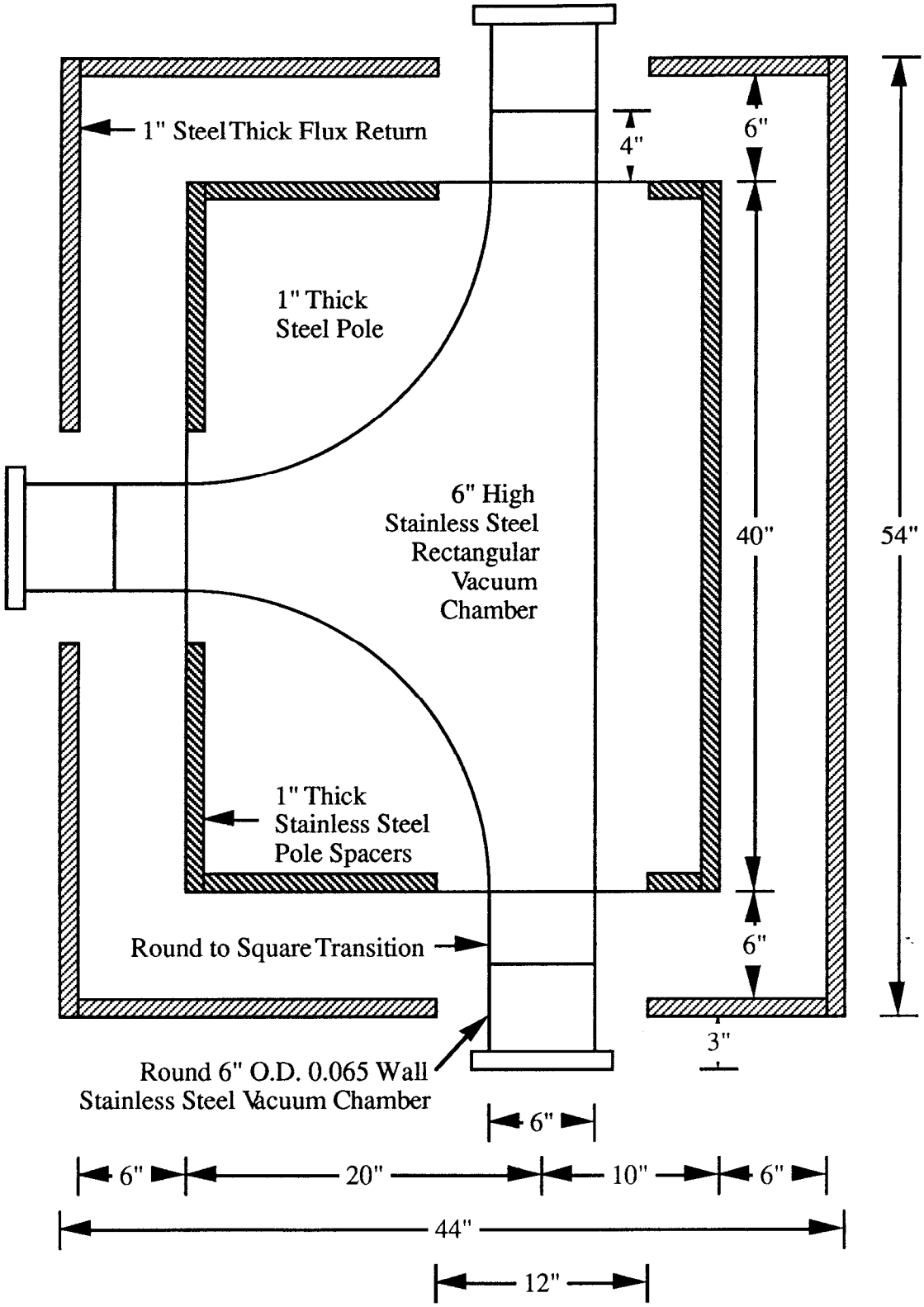

Figure 2: Top view of the magnet and the stainless steel vacuum chamber.

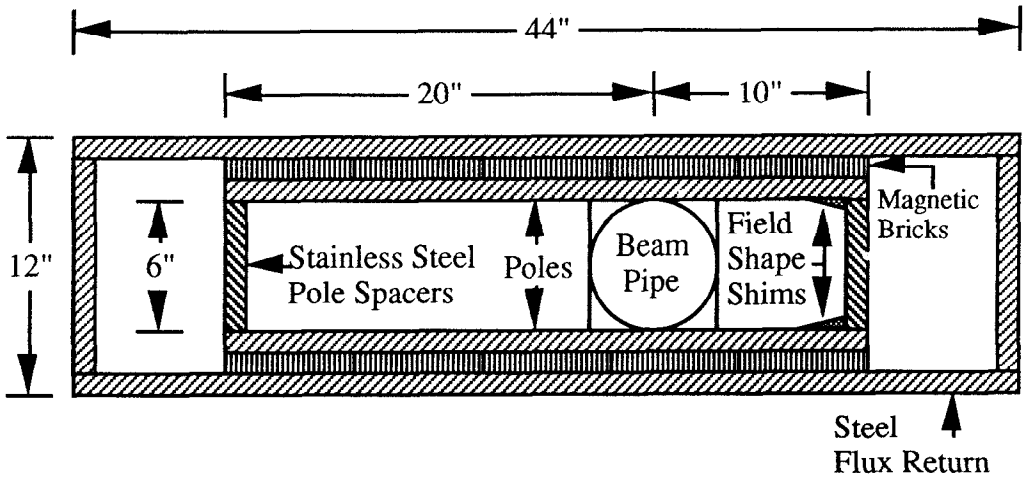

Figure 3: Antiproton inlet view of the dipole magnets showing the bricks stacked on either side of the poles in their 6" orientation. Note that field shaping shims were added to make the field the antiprotons see more uniform.

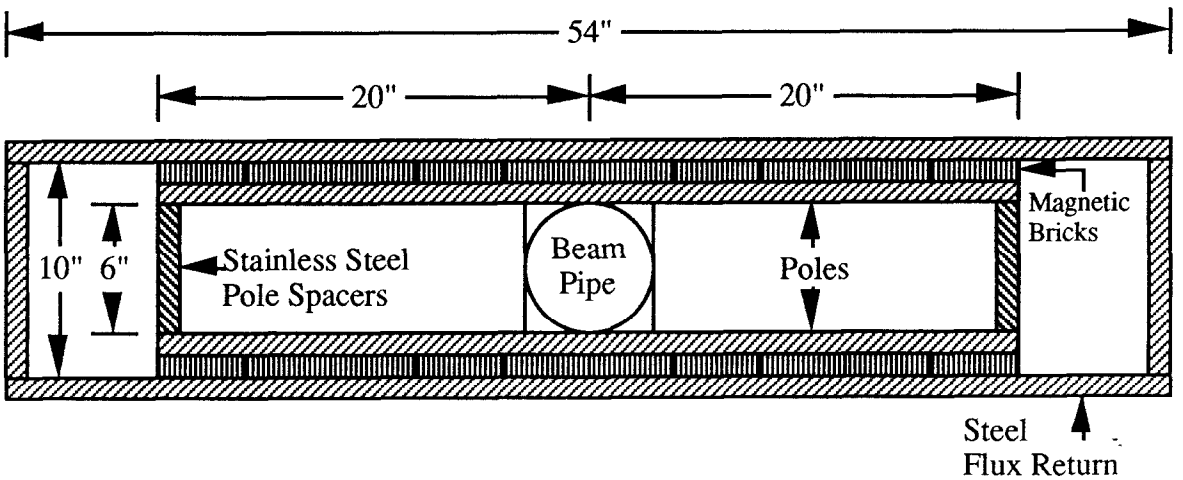

Figure 4: Electron inlet view of the dipole magnets showing the bricks stacked on either side of the poles in their 4" orientation.